AWS Solution Architect Training with
AWS Cloud Practitioner Global Certification Training

Trainer: Aravindraj.G- Nminds Academy

Configure Apache web server on Linux Instance in AWS

SRINATH K

BSC -INFORMATION TECHNOLOGY

VET INSTITUE OF ARTS AND SCIENCE

Erode

Objective

EC2 (Elastic Compute Cloud) is a core service provided by Amazon Web Services (AWS) that enables users to rent virtual servers in the cloud to run applications, store data, or handle computational workloads.

An EC2 Linux instance is a virtual machine running the Linux operating system on Amazon Web Services (AWS) EC2 (Elastic Compute Cloud). This allows you to run Windows-based applications, manage Windows Server configurations, and use various Microsoft software (like SQL Server, Apache,FileServer etc.) in the cloud without having to manage physical hardware.

Use Cases for EC2 Linux Instances:

- Web and Application Hosting: Run Apache web servers or other Linux-based web applications in the cloud.
- Database Servers: Host SQL Server databases with EC2 Linux instances, using SSH or EC2 for more control.
- Remote Desktop Applications: Set up SSH (Remote Desktop Services) for remote access to Linux desktops in the cloud.
- Development and Testing: Create development environments with linux OS to test php,MySql or other Linux-based applications.

Topology

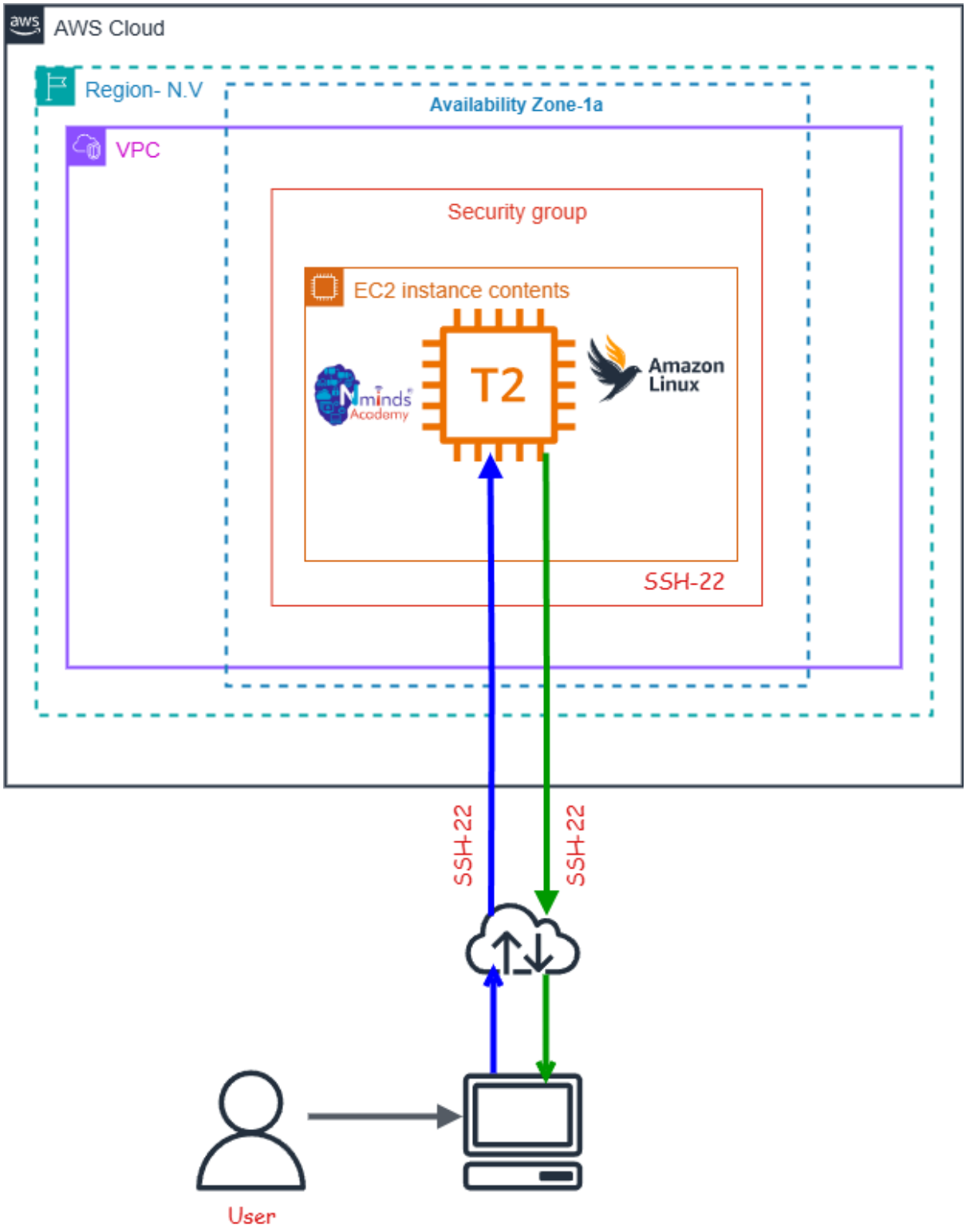
AWS Cloud
Region- N.V
Availability Zone-1a
VPC
Security group
EC2 instance contents
T2
Amazon Linux
SSH-22
SSH-22
SSH-22
User

Execution Tasks: